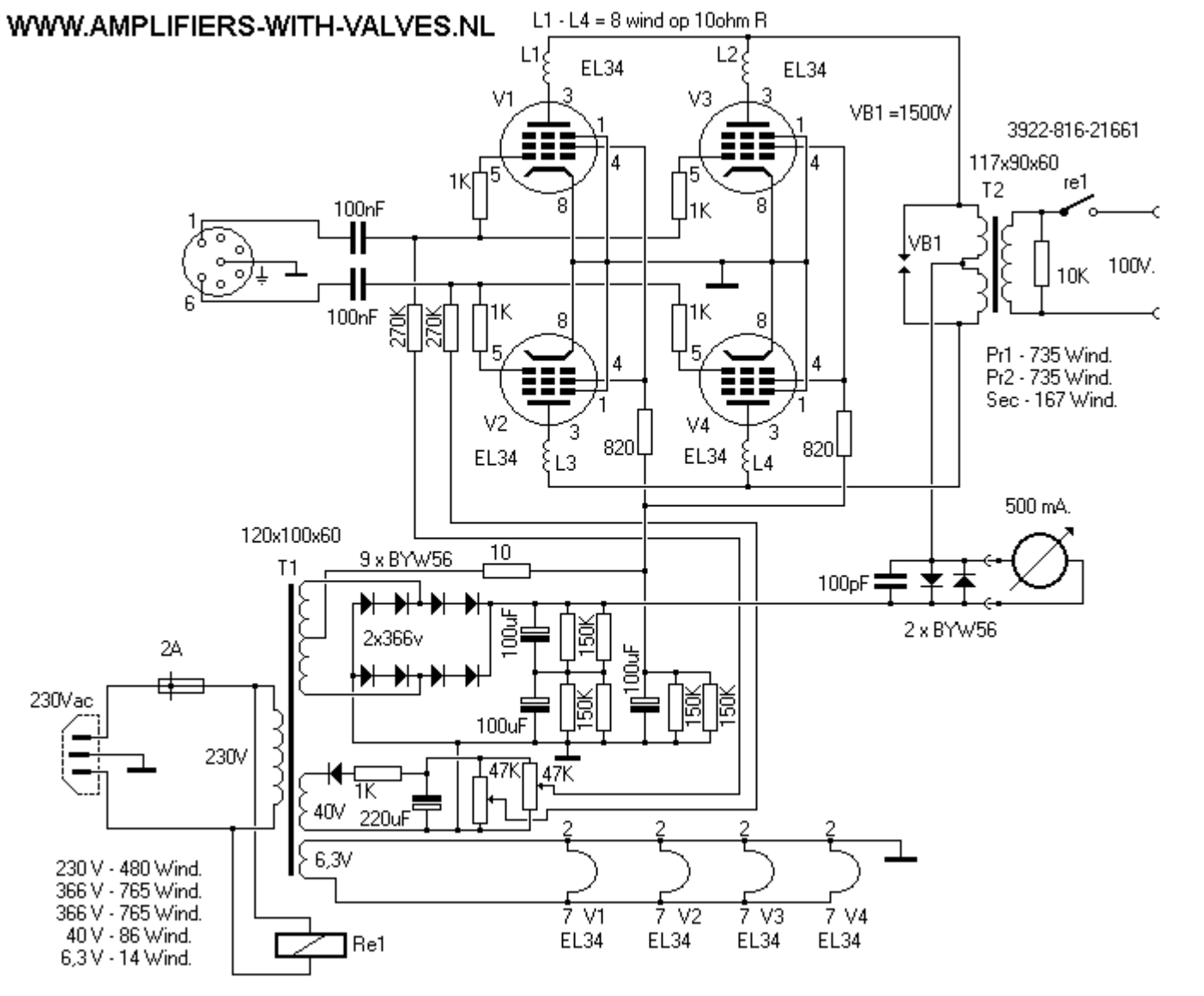WWW.AMPLIFIERS-WITH-VALVES.NL